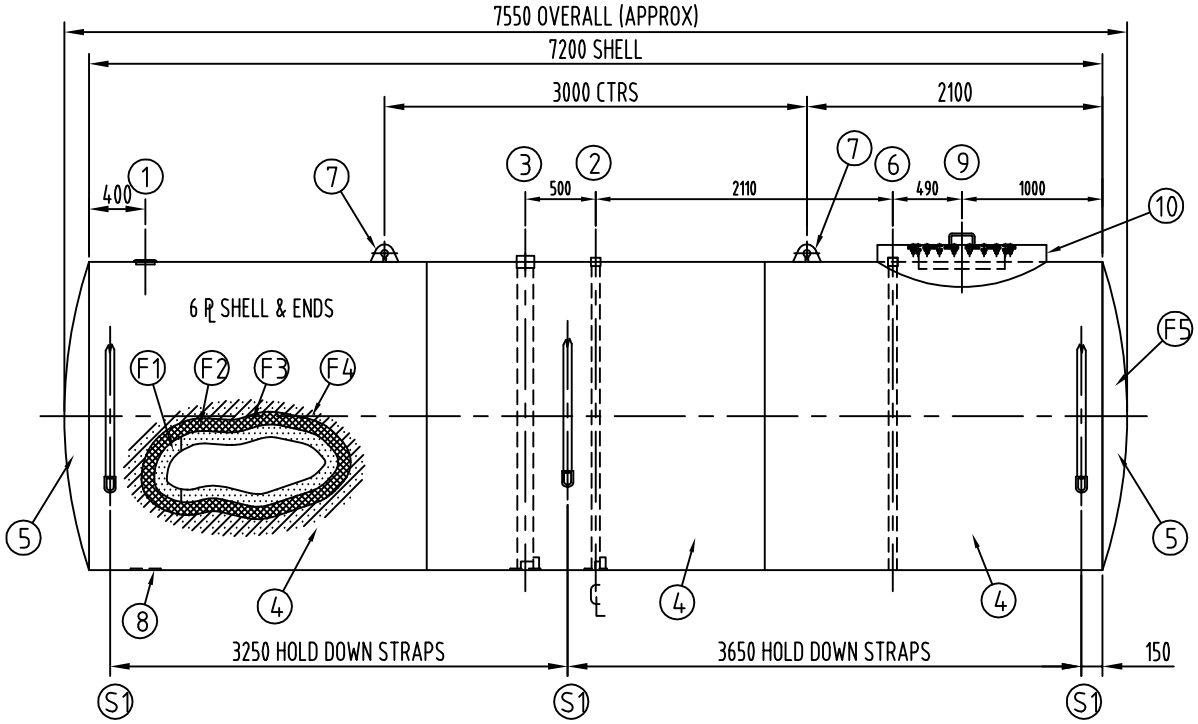


| | | |
|---|---|---|
| F5 | RUST RED FLOWCOAT | - |
| F4 | GLASS OWENN'S CORNINS 360 RR | - |
| F3 | CATALYST | - |
| F2 | AROPOL 7241 PS/PW | - |
| F1 | STAND OFF MATERIAL | - |
| ITEM | DESCRIPTION | WEIGHT |

FIBREGLASS

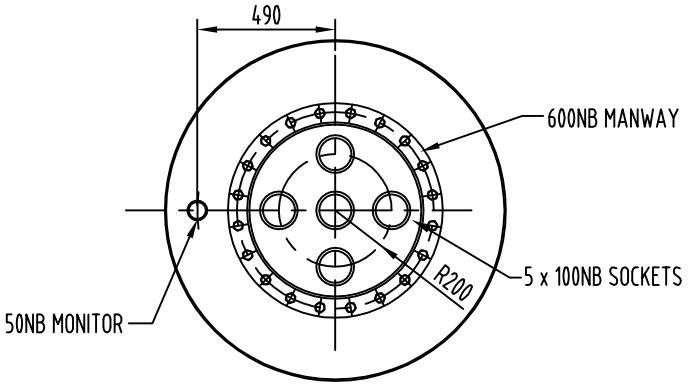


PLAN VIEW ON MANWAY

NOTE:

1: VACUUM ON INTERSTITUAL SPACE IS FACTORY SET & GAUGE SET
2: INSTALLATION AS PER GLASTEEL II INSTALLATION INSTRUCTIONS & APPLICABLE CODES
3: VESSEL IDENTIFICATION No. & MANUFACTURE DATE ARE LAMINATED TO TOP OF VESSEL
4: VESSEL MANUFACTURED TO AS1692
5: PLASTIC LIFTING LUG COVERS SUPPLIED WITH VESSEL
6: HOLD DOWN STRAPS POSITION ARE TO BE MARKED ON VESSEL DURING MANUFACTURING
7: ALL SOCKETS TO BE CLEANED AND FITTED WITH PLASTIC DUST CAPS
8: 6mm STRIKER PLATES TO BE FITTED UNDER ALL OPENINGS
9: ALL WELDS AS PER AS1554.1-GP (N.D.T. - VISUAL)
10: VOLUME = 27.780 L (APPROX)
11: WEIGHT OF TANK = 2,635 kg (APPROX)

| | | | |
|---|---|---|---|
| S1 | HOLD DOWN STRAPS | 3 | 015001 |
| | VACUUM MONITOR GAUGE | 1 | 006137, 017111, 017160 |
| | LIFTING LUG COVERS | 2 | 015071 |
| | DIPSTICK T25 | 1 | SUB1064 |
| | ACCESSORIES | QTY | PART / SUB ASSM No. |

| | | | |
|---|---|---|---|
| 10 | 1 | FRP COLLAR | SUB1028 |
| 9 | 1 | 600NB MANWAY C/W 5 x 100NB SOCKETS | SUB1095 |
| 8 | 1 | STRIKER PLATE | SUB1047 |
| 7 | 2 | LIFTING LUG - 2 TONNE | SUB1075 |
| 6 | 1 | 50NB BSP MONITOR C/W INTERNAL PIPE | SUB1081 |
| 5 | 2 | END Ø2190 I.D x 5 PLATE | SUB1004 |
| 4 | 3 | SHELL Ø2190 I.D x 5 PLATE x 2400 LONG | SUB1038 |
| 3 | 1 | 100NB FILL SOCKET C/W PIPE | SUB1056 |
| 2 | 1 | 50NB DIP SOCKET C/W PIPE | SUB1050 |
| 1 | 1 | 100NB BSP SOCKET | |
| ITEM | QTY | DESCRIPTION | PART / SUB ASSM No. |

| No. | REVISION DETAILS | BY | DATE |
|---|---|---|---|
| F | | | |
| E | | | |
| D | | | |
| C | | | |
| B | | | |
| A | ORIGINAL ISSUE | 0 | 0 |

CLIENT: FTS STD

| | |
|---|---|
| DRAWN: V.B.B. | DATE: 11-07-01 |
| CHECKED: | DATE: |
| APPROVED: | DATE: |
| ORDER No: | No OFF: ONE (1) |
| SCALE: 1:30 | CAD REF: JW-GST-SC-P |

Dimension in millimetres
All tolerancing to be to the applicable design code of manufacture, and/or client requirement.

FIBRETANK SYSTEMS PTY LIMITED
PO BOX 102
CARRINGTON N.S.W. 2294
PHONE (02) 4961-2745
FAX: (02) 4962-2812

THIS DRAWING & THE INFORMATION CONTAINED HEREIN IS THE PROPERTY OF FIBRETANK SYSTEMS AND IS STRICTLY CONFIDENTIAL & MUST NOT BE USED OR DISCLOSED WITHOUT WRITTEN CONSENT OF FIBRETANK SYSTEMS Pty LIMITED

TITLE: GENERAL ARRANGEMENT T25
GLASTEEL II U/G STORAGE VESSEL (6mm SHELL)

VESSEL CLASS: N/A

ESTIMATE NUMBER: N/A

DRAWING NUMBER: JW 025000-000

SHEET SIZE: A3

JOB No:

SHEET: 1 of 1

REVISION: A