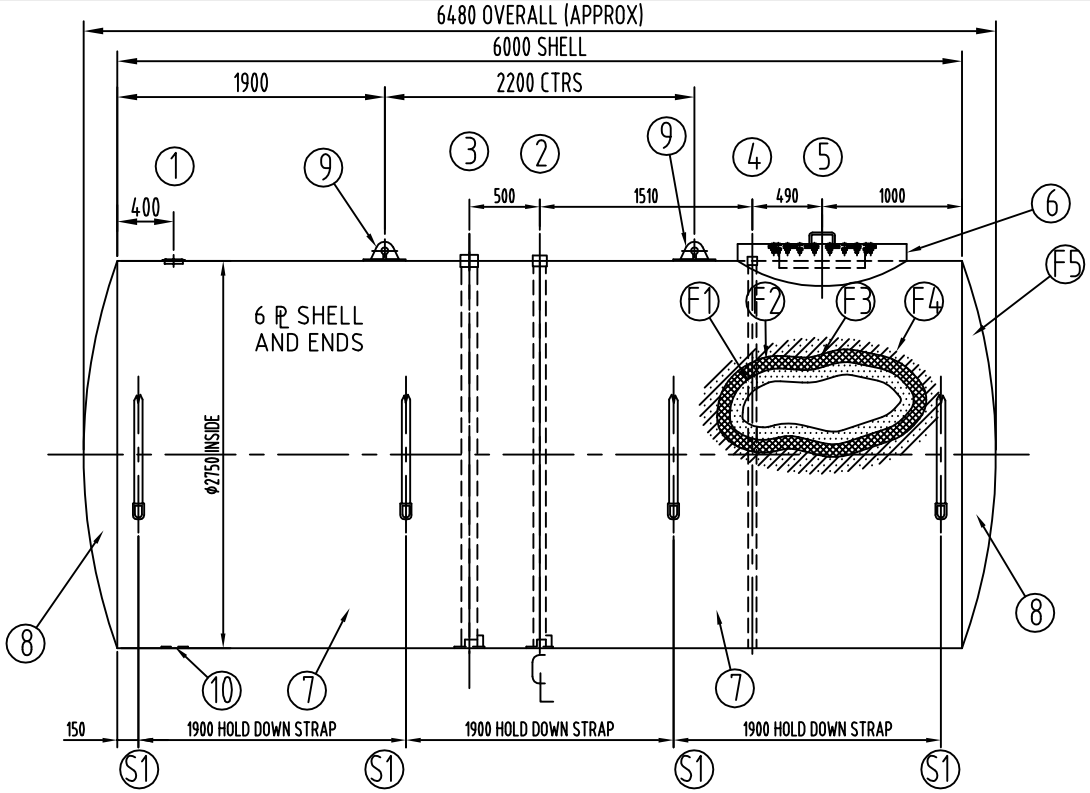

ITEM	DESCRIPTION	WEIGHT
F5	RUST RED FLOWCOAT	-
F4	GLASS OWENN'S CORNINS 360 RR	-
F3	CATALYST	-
F2	AROPOL 7241 PS/PW	-
F1	STAND OFF MATERIAL	-

FIBREGLASS

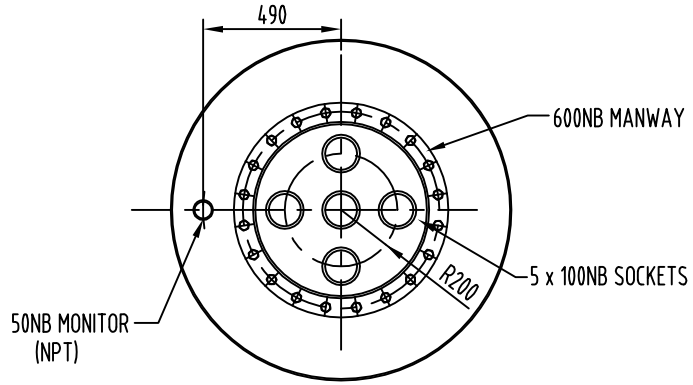

PLAN VIEW ON MANWAY

ACCESSORIES	QTY	PART / SUB ASSM No.
S1 HOLD DOWN STRAP	4	-
VACUUM MONITOR GAUGE	1	-
LIFTING LUG COVERS	2	-
DIPSTICK T35	1	SUB1067

NOTE:

1: VACUUM ON INTERSTITUAL SPACE IS FACTORY SET & GAUGE SET
2: INSTALLATION AS PER GLASTEEL II INSTALLATION INSTRUCTIONS & APPLICABLE CODES
3: VESSEL IDENTIFICATION No. & MANUFACTURE DATE ARE LAMNATED TO TOP OF VESSEL
4: VESSEL MANUFACTURED TO AS1692
5: PLASTIC LIFTING LUG COVERS SUPPLIED WITH VESSEL
6: HOLD DOWN STRAPS POSITION ARE TO BE MARKED ON VESSEL DURING MANUFACTURING
7: ALL SOCKETS TO BE CLEANED AND FITTED WITH PLASTIC DUST CAPS
8: 6mm STRIKER PLATES TO BE FITTED UNDER ALL OPENINGS
9: ALL WELDS AS PER AS 1554.1-GP (N.D.T. - VISUAL)
10: VOLUME = 37,060 L (APPROX)
11: WEIGHT OF TANK = 3,425 kg (APPROX)

ITEM	QTY	DESCRIPTION	PART / SUB ASSM No.
10	1	STRIKER PLATE	SUB1047
9	2	LIFTING LUG - 5 TONNE C/W DOUBLER PAD	SUB1076
8	2	END SLIP IN 2750 I.D x 6 PLATE	SUB1015
7	3	SHELL 2750 I.D x 6 PLATE x 3000 LONG	SUB1039
6	1	FRP COLLAR	SUB1028
5	1	600NB MANWAY C/W 5 x 100NB SOCKETS	SUB1095
4	1	50NB (NPT) MONITOR SOCKET C/W INTERNAL PIPE	SUB1060
3	1	100NB FILL SOCKET C/W PIPE	SUB1057
2	1	80NB DIP SOCKET C/W PIPE	SUB1052
1	1	100NB PHOENIX FLANGE	006395

No.	REVISION DETAILS	BY	DATE
F			
E			
D			
C			
B			
A	ORIGINAL ISSUE	0	0

CLIENT: FTS STD

DRAWN: V.B.B.	DATE: 11-07-01
CHECKED:	DATE:
APPROVED:	DATE:
ORDER No:	No OFF: ONE (1)
SCALE: 1:40	CAD REF: JW-GST-SC-S

Dimension in millimetres
All tolerancing to be to the applicable design code of manufacture, and/or client requirement.

FIBRETANK SYSTEMS PTY LIMITED
PO BOX 102
CARRINGTON N.S.W. 2294
PHONE (02) 4961-2745
FAX: (02) 4962-2812

THIS DRAWING & THE INFORMATION CONTAINED HEREIN IS THE PROPERTY OF FIBRETANK SYSTEMS AND IS STRICTLY CONFIDENTIAL & MUST NOT BE USED OR DISCLOSED WITHOUT WRITTEN CONSENT OF FIBRETANK SYSTEMS Pty LIMITED

TITLE: GENERAL ARRANGEMENT T30
GLASTEEL II U/G STORAGE VESSEL (6mm SHELL)

VESSEL CLASS: N/A

ESTIMATE NUMBER: N/A

DRAWING NUMBER: JW 030000-000

SHEET SIZE: A3

JOB No:

SHEET: 1 of 1

REVISION: A