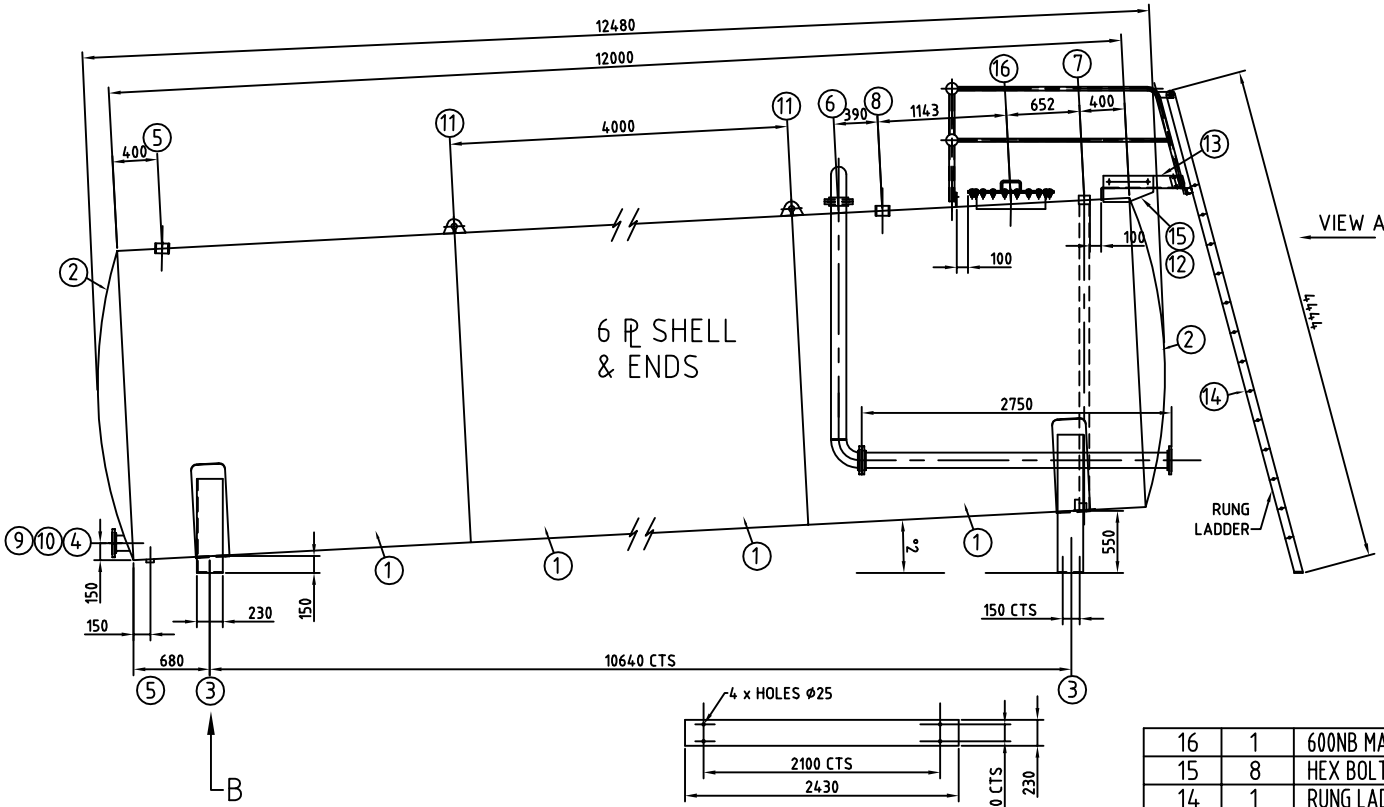


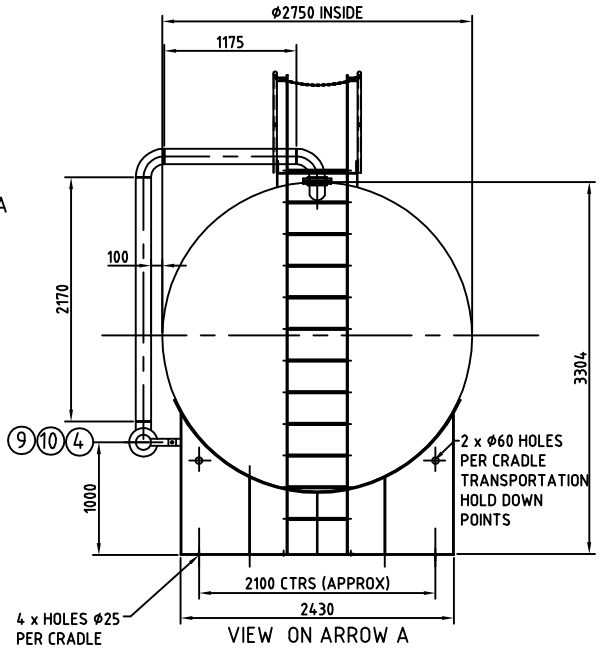


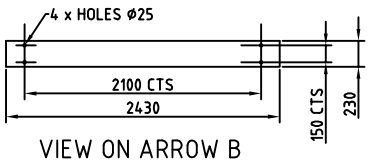


VIEW ON ARROW B

## NOTES:

1. VESSEL TO BE MANUFACTURED TO AS1692 AND AIR TESTED TO 35kPa
2: VESSEL WEIGHT APPROX 8000 kgs.
3: VESSEL VOLUME APPROX 72700 Ltrs.
4: PLATFORM WILL BE AS SHOWN UNLESS NOMINATED OTHERWISE BY CUSTOMER
5. ALL WELDING TO BE IN ACCORDANCE WITH AS1554. 1 CLASS: GP (NDT - VISUAL)
6: ALL FLANGE HOLES TO STRADDLE NATURAL CENTRE LINE.

## SURFACE FINISH:

INTERNAL - SANDBLAST & 2 COATS TANKLINER (DFT 250 microns)
EXTERNAL - SANDBLAST & 1 COAT 2 PAC EPOXY - WHITE (DFT 150 microns)

| ITEM | QTY | DESCRIPTION | PART / SUB ASSM No. |
|---|---|---|---|
| 16 | 1 | 600NB MANWAY FTS STD | - |
| 15 | 8 | HEX BOLT AND NUT: M16 x 40 (GALV) | 018009 |
| 14 | 1 | RUNG LADDER SUIT 2750 SHELL | SUB 2039 |
| 13 | 1 | 700x700 PLATFORM | SUB2566 |
| 12 | 2 | 2750 PLATFORM MOUNT BRKTS | SUB1034 |
| 11 | 2 | LIFTING LUGS - 5 TONNE C/W DOUBLER PAD | SUB1076 |
| 10 | 2 | 125NB CARBON STEEL BUTTERFLY VALVE WITH S/STEEL INSERTS | KEYSTONE F990 |
| 9 | 2 | 100NB S/STEEL KAMLOCK & DUST CAP | 006225 |
| 8 | 1 | 80NB SOCKET BSP BLACK - LEVEL | 006227 |
| 7 | 1 | DIP PIPE ASSY - 80NB | SUB1052 |
| 6 | 1 | FILL PIPE ASSY- 125NB 150lb ANSI S.O.R.F (304 S/STEEL) | SUB2584 |
| 5 | 2 | 50NB BSP SOCKET - VENT | 006225 |
| 4 | 2 | 125NB 150lb ANSI S.O/R.F. FLANGE | 006227 |
| 3 | 2 | 2750 CRADLES/SADDLE PLATE | SUB1045 |
| 2 | 2 | ENDS: DISHED & FLANGED (BUTT) 2750 ID x 6 PL | SUB1015 |
| 1 | 4 | SHELL: 2750 ID x 6 PL x 3000 LONG | SUB1039 |

| ACCESSORIES | PART / SUB ASSM No. |
|---|---|
| | |
| | |

| No. | REVISION DETAILS | BY | DATE |
|---|---|---|---|
| F | | | |
| E | | | |
| D | | | |
| C | | | |
| B | FILL LINE HEIGHT WAS 1200 NOW 1000 | TAH | 23-10-08 |
| A | ORIGINAL ISSUE | - | - |

CLIENT: DOWNER EDI MINING

| | |
|---|---|
| DRAWN: TAH | DATE: 22-10-08 |
| CHECKED: | DATE: |
| APPROVED: | DATE: |
| ORDER No: - | No OFF: - |
| SCALE: N.T.S. | CAD REF: SA-Steel-AG |

Dimension in millimetres
All tolerancing to be to the applicable design code of manufacture, and/or client requirement.

FIBRETANK SYSTEMS PTY LIMITED
PO BOX 102
CARRINGTON N.S.W. 2294
PHONE (02) 4961-2745
FAX: (02) 4962-2812

THIS DRAWING & THE INFORMATION CONTAINED HEREIN IS THE PROPERTY OF FIBRETANK SYSTEMS AND IS STRICTLY CONFIDENTIAL & MUST NOT BE USED OR DISCLOSED WITHOUT WRITTEN CONSENT OF FIBRETANK SYSTEMS Pty LIMITED

TITLE: GENERAL ARRANGEMENT (REVERSE FILL)
T70 STEEL ONGROUND EMULSION VESSEL

VESSEL CLASS: -

ESTIMATE NUMBER: -

DRAWING NUMBER: SA 070000-007

SHEET SIZE: A3

JOB No: -

SHEET: -

REVISION: B